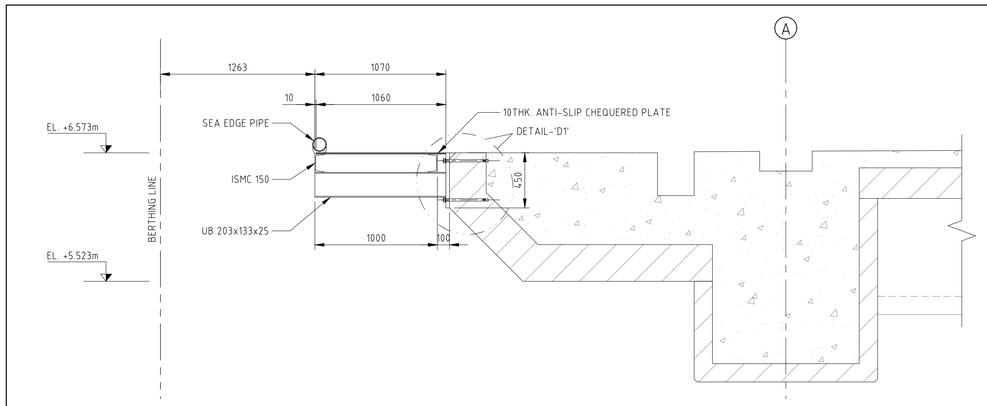

SECTION B
1:25

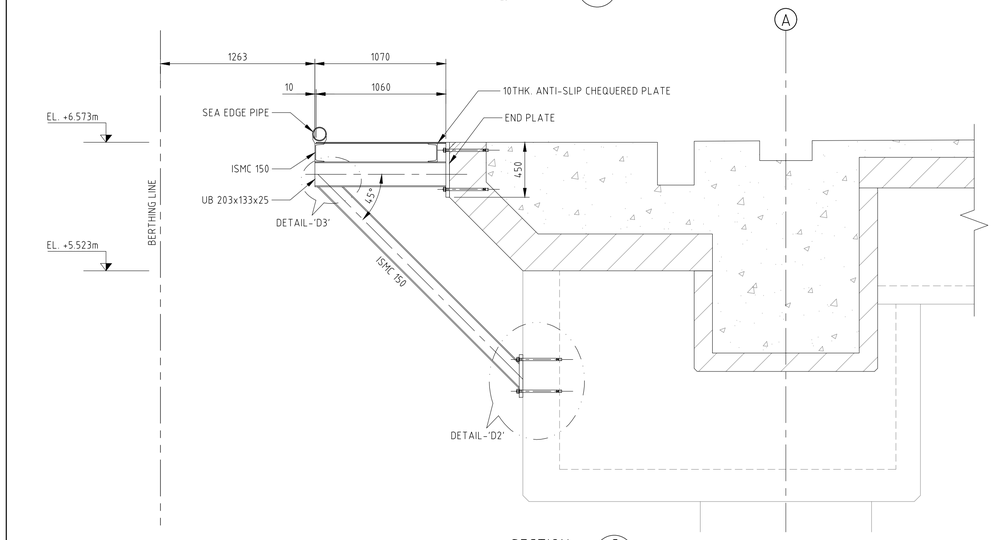

SECTION C
1:25

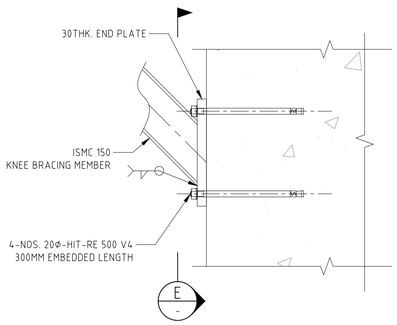

DETAIL-'D2'
1:25

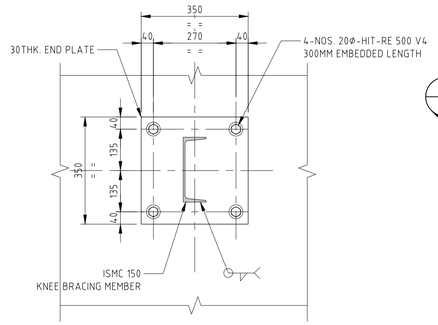

SECTION E
1:25

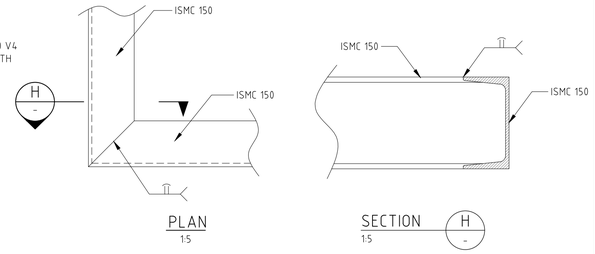

PLAN
1:5

SECTION H
1:5

TYPICAL CONNECTION DETAIL FOR ISMC 150 FRAME
1:5

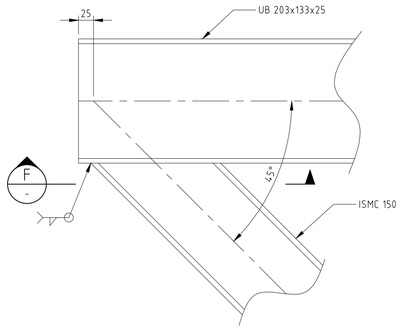

DETAIL-'D3'
1:5

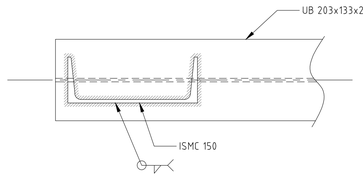

SECTION F
1:25

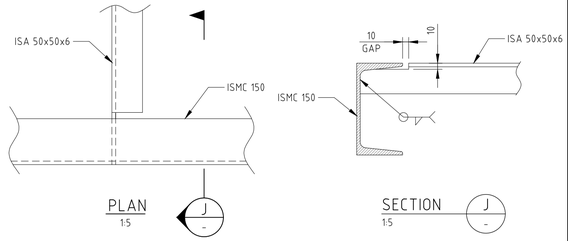

PLAN
1:5

SECTION J
1:5

TYPICAL CONNECTION DETAIL FOR ISA 50x50x6 TO ISMC 150
1:5

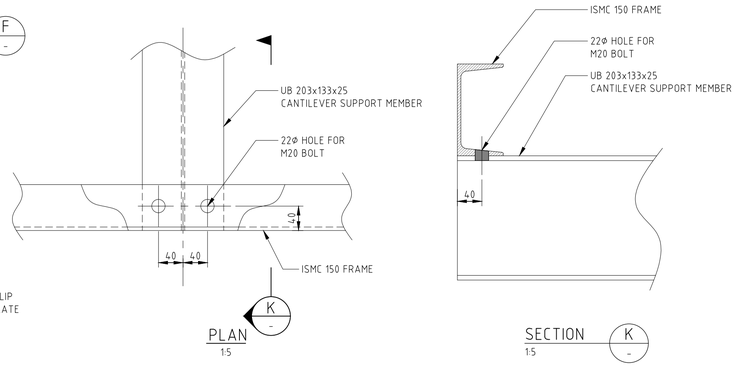

PLAN
1:5

SECTION K
1:5

TYPICAL CONNECTION DETAIL FOR ISMC 150 FRAME TO UB 203x133x25
1:5

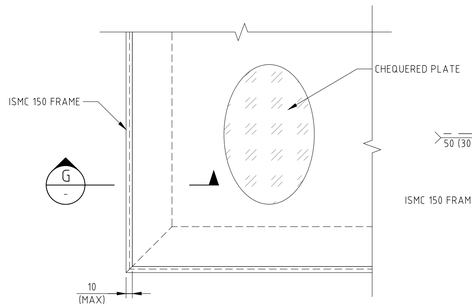

TYPICAL PLAN FOR CHEQUERED PLATE
AT EDGE OF PLATFORM
1:5

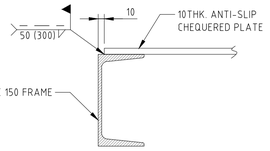

SECTION G
1:5

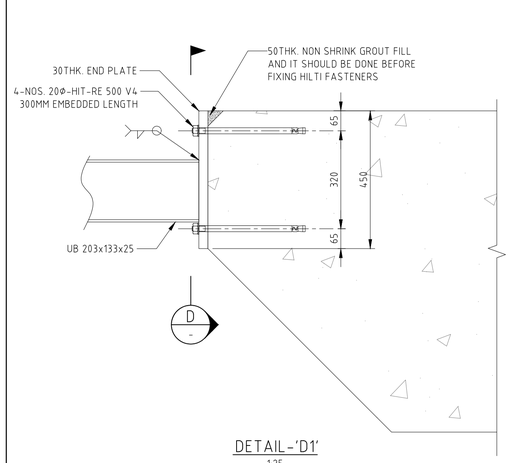

DETAIL-'D1'
1:25

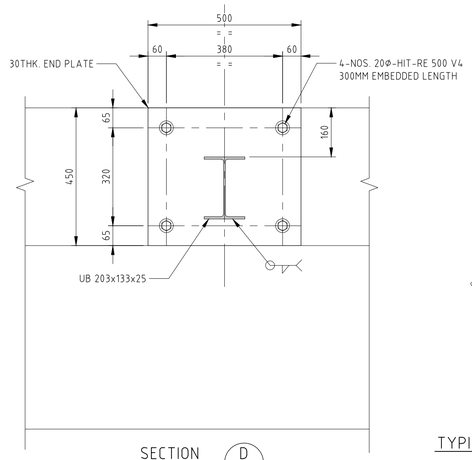

SECTION D
1:25

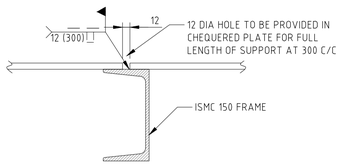

TYPICAL CHEQUERED PLATE CONNECTION DETAILS AT
CONTINUOUS OVER A SUPPORT LOCATION
1:5

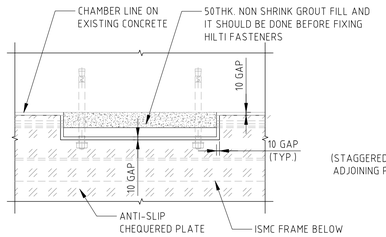

TYPICAL PLAN FOR CHEQUERED PLATE
AT END PLATE LOCATION
1:10

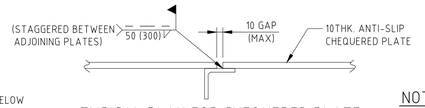

TYPICAL PLAN FOR CHEQUERED PLATE
AT MIDDLE OF PLATFORM
1:5

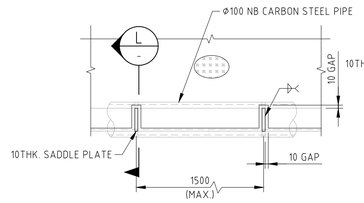

TYPICAL PLAN FOR
SEA EDGE HANDRAIL FIXING
1:10

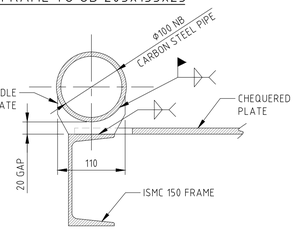

SECTION L
1:5

NOTES:

1. ALL DIMENSIONS ARE IN MILLIMETERS.
2. FOR OTHER NOTES REFER DRAWING NO: 313102-00034-IN-MA-DAL-1006.

REV	DATE	REVISION DESCRIPTION	DRAWN	DRAFT CHK	DESIGNED	ENG CHK	APPROVED	CUSTOMER	REF DRAWING No	REFERENCE DRAWING TITLE
B	09-JULY-26	ISSUED FOR CONSTRUCTION	RVI	MAM	MAM	YNR	JSH			
A	30-JUN-26	ISSUED FOR REVIEW	RVI	MAM	MAM	YNR	JSH			

A1 SHEET SCALE

Copyright ©
Worley Services Pty Ltd
ABN 61 001 279 812

WORLEY PROJECT No.
313102-00034

ENGINEERING AND PERMIT STAMPS (As Required)

CUSTOMER
APM TERMINALS
Lifting Global Trade

"This drawing is prepared solely for the use of the contractual customer of Worley and Worley assumes no liability to any other party for any representations contained in this drawing."

worley
DELIVERING SUSTAINABLE CHANGE

GANGWAY LANDING-APMT
GANGWAY LANDING SUPPORTING STRUCTURE
FENDER 46 TO 48 & 57 TO 59
CONNECTION DETAILS

DRG No 313102-00034-IN-MA-DAL-1005
REV B

WORLEY_A1_REV2

LOCATION: N:\PROPOSALS\2026 03 01 APMT - ENGG & DESIGN CONSULTANCY SERVICES FOR GANGWAY LANDING SRUCTURE\01 SUBMISSION\DRAWINGS\REV-B\313102-00034-IN-MA-DAL-1005_REV-B.DWG
USER NAME: vivek.raj
PLOT DATE & TIME: 9/7/2026 12:28:21 PM
SAVE DATE & TIME: 9/7/2026 12:25:35 PM